Specification	AXRB9000	Rev.: 2	Date: 2016-07-18

Oscillator type: **High Stability Low Noise Rubidium Frequency Reference in 19” rack (2 HU) with up to 3 outputs**

Features:

- **Very High Long-term Frequency Stability $2 \cdot 10^{-10}$ per year**
- **Short-term Stability (ADEV) $1 \cdot 10^{-12}$ @ τ = 100 sec**
- **Low Phase Noise**
- **Up to 3 isolated outputs for frequency distribution**
- **Slim 19” rack with 2 HU**
- **Cascadable with Frequency Distribution Units AXDA9000**

Models:

Item	(D)OCXO	(D)OCXO with integrated Distribution amplifiers	GPS-disciplined OCXO	Rubidium
Model	AXIOM9000	AXDO9000	AXGPS9000	**AXRB9000**
Features	DOCXO option Ultra-low noise Very high stability Can be combined with AXDA9000 up to 48 outputs	Stability as AXIOM9000 plus low noise high isolation frequency distribution amplifier with 4 to 16 outputs	Low noise Stability 10^{-11} Distribution option	Excellent long-term stability Distribution option
Performance	See separate data sheet		Consult factory	See specification

Parameter	min.	typ.	max.	Unit	Condition
Nominal output frequency		10.000		MHz	
Frequency stability					
vs. operating temperature range			±0.1	ppb	steady state
Long term (aging) per month			±0.03	ppb	after 3 months operation
Long term (aging) 1st year			±0.2	ppb	after 3 months operation
Long term (aging) over 10 years			±1	ppb	after 3 months operation
Frequency adjustment range					
Mechanical Frequency Control		±2.5		ppb	By trimmer access (Note 3)
RF output					
RF output ports		1 Rubidium direct output 3 splitted outputs			See block diagram and enclosure drawing
Signal waveform		Sine wave			
Load R_L		50		Ω	±5%
Output level per port	+12 +7	+14 +9		dBm dBm	Rubidium direct output Splitted outputs
Isolation between splitted ports	30	40		dB	
Harmonics			-40	dBc	
Spurious			-80	dBc	
Phase noise (Note 4)		See table 1			Option 1
Short-tem stability (ADEV) (Note 4)			$1\cdot10^{-11}$ $3\cdot10^{-12}$ $1\cdot10^{-12}$		@ τ = 1 sec @ τ = 10 sec @ τ = 100 sec
Warm-up time @ +25°C (Note 2)			15	min	< ±0.5 ppb
Retrace			±0.05	ppb	1 h after 24 hrs OFF
AC Supply voltage V_S	100	230	240	V	IEC 60320-1 / C14
AC Supply input frequency	50		60	Hz	
Power consumption (steady state)			15	W	@ +25°C
Power consumption (warm-up)			30	W	
Operating temperature range	0		+50	°C	
Enclosure (see drawing) (WxDxH)		483x250x88		mm	
RF Connectors		BNC female			@ Rear plate
Weight			8	kg	

Notes:

1. Terminology and test conditions are according to IEC60679-1 and MIL-PRF-55310, unless otherwise stated
2. Warm-up indicator at front plate. Indicator ON when Rubidium locked.
3. Trimmer accessible at front plate. Adjustment range sufficient for 15 years operation.
4. Other stabilities and phase noise on request

Absolute Maximum Ratings

Parameter	min.	max.	Unit	Condition
AC Supply Voltage V_S	90	260	V	
AC Supply input frequency	47	63	Hz	
AC Supply input current		1	A	Fuse accessible at rear plate
Splitter input level (SPLIT IN)		+20	dBm	
Storage Temperature	-20	+70	°C	

Ordering Code

Model	Option 1 [Phase noise]	Revision	Frequency [MHz]
AXRB9000	Table 1	Rev.2	10.000

Example: AXRB9000-LN_Rev.2 – 10.000 MHz

Phase Noise – Option 1:

Offset	10 MHz		Unit
	LN	ULN	
1 Hz	-80	-105	dBc/Hz
10 Hz	-100	-138	dBc/Hz
100 Hz	-130	-155	dBc/Hz
1 kHz	-140	-163	dBc/Hz
≥10 kHz	-150	-170	dBc/Hz

Table 1

Extension of AXRB9000 with optional distribution amplifier AXDA9000

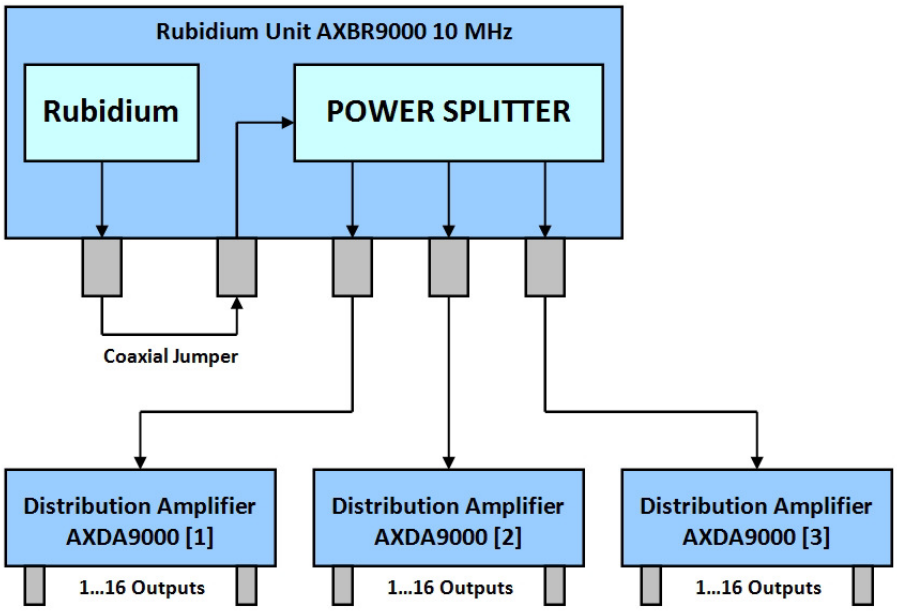

Handling & Testing

Parameter	Procedure / Test condition
Sinusoidal vibration	max. 0.15 mm <10 Hz, 1 g at 10~2000 Hz
Random vibration	max. 0.001 g^2/Hz, 10~2000 Hz
Mechanical shock	max. 10 g, 6 ms half sine
Handling and Testing	Careful handling. Avoid excessive air flow, vibration and shock during operation.
VDE 0701-0702 Tested	✖ Yes ☐ No
RoHS-Compliant	✖ Yes ☐ No

Enclosure drawing

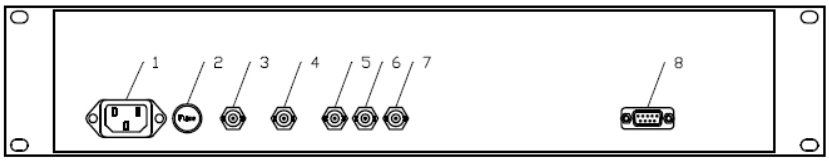

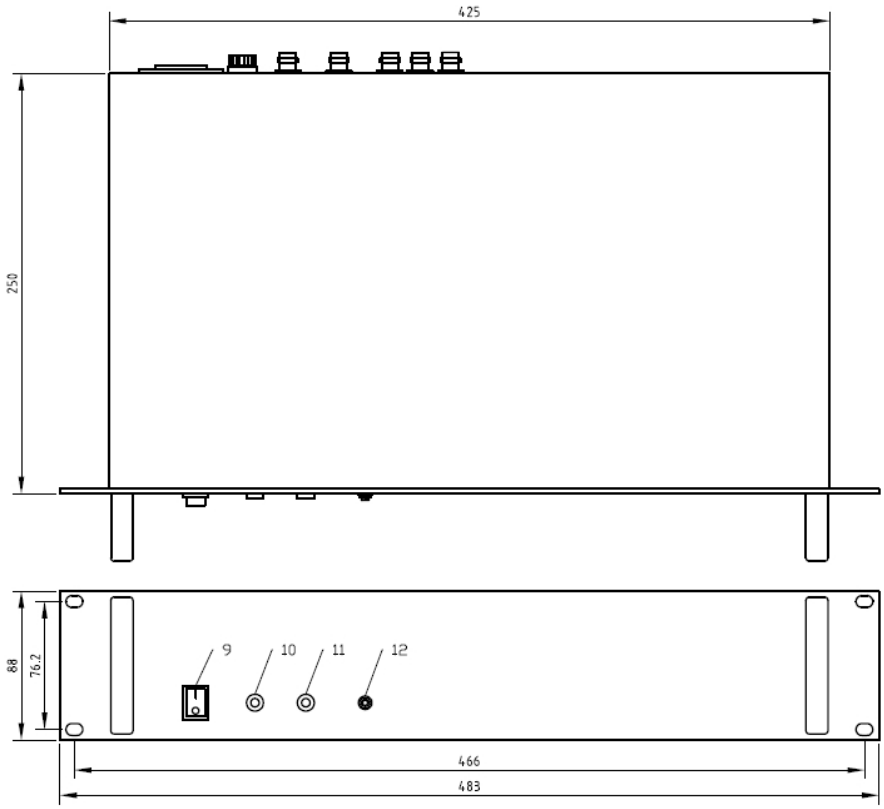

Connections and operation

#	Panel	Symbol	Function
1	**Rear**	POWER IN	AC Supply Input (IEC 60320-1 / C14)
2		FUSE	1 A Slow 5x20 mm Fuse
3		RUB OUT	Direct Rubidium output
4		SPLIT IN	Power splitter input
5		OUT 1	Splitted output 1*
6		OUT 2	Splitted output 2*
7		OUT 3	Splitted output 3*
8		RS232	D-Sub 9-Pin-Port for Operation/Monitoring Read/Write Access (see pin connections below)
9	**Front**	POWER SWITCH	Power Switch ON/OFF
10		POWER ON	LED – Power On Indicator
11		RUB READY	LED – Rubidium Ready Indicator
12		ADJUST	Frequency adjustment potentiometer

*Unused outputs must be terminated with 50 Ω loads

Pin connections

Pin #	Symbol	Function
1	N.C.	No Connection
2	GND	Ground
3	LD	Lock indicator TTL
4	N.C.	No Connection
5	GND	Ground
6	TxD	RS232 Transmit TTL
7	GND	Ground
8	N.C.	No Connection
9	RxD	RS232 Receive TTL

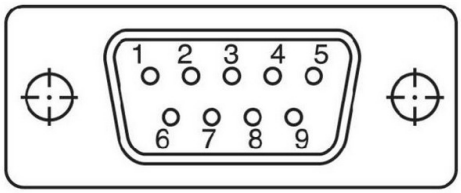

Data sheet is for information purposes only and may be subject to modifications or may be discontinued without notice.

Revision History

Rev.	Drawing	Date [dd.mm.yyyy]	Remarks	Author	Checked
1	D0	07.07.2016	First issue	HH	BN
2	D0	18.07.2016	Retrace and PN options added	HH	HH